SPECIFICATION APPLIED

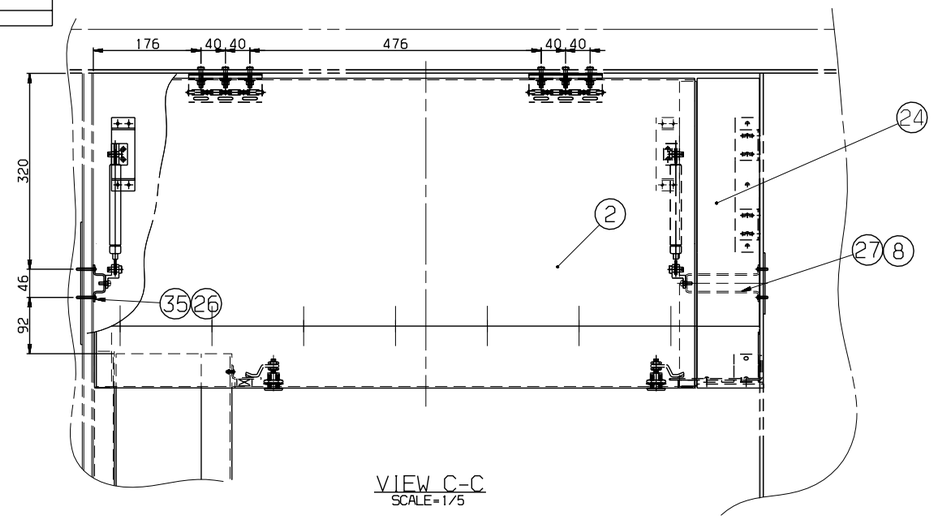

VIEW C-C
SCALE=1/5

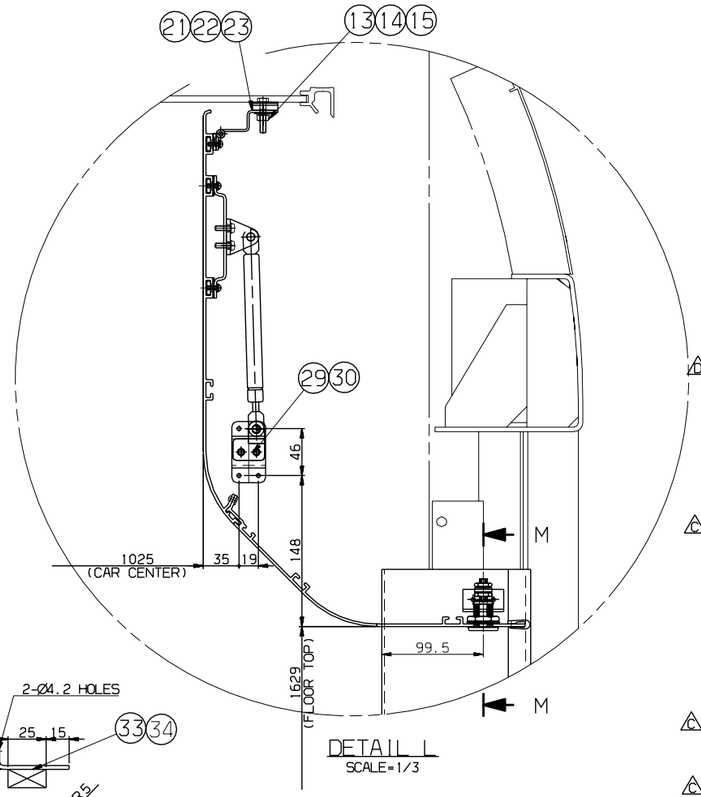

DETAIL L
SCALE=1/3

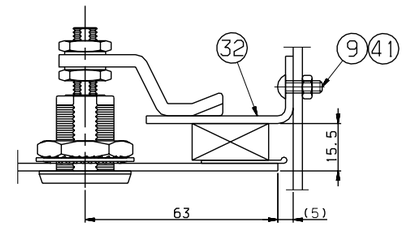

SECTION M-M
SCALE=1/1

NOTE:
1. INSTALL PART NO. 1, 2, 3, 4 BASED ON CAR CENTER.
2. THIS PART SHALL BE INSTALLED ACCORDING TO WORK CONDITION.

	NO.	PART NO.	DESCRIPTION	MATERIAL	Q'TY		REMARKS
D	48	RFA25001AN0-048	BRACKET	SUS304	2		T1.5
	47	RFA25001AN0-047	BRACKET	SUS304	2		T1.5
	46	RFA25001AN0-046	PACKING	NEOPRENE RUBBER	2		T3X30X200
	45	RFA25001AN0-045	PACKING	NEOPRENE RUBBER	4		T3X30X100
	44	RFA25001AN0-044	PACKING	NEOPRENE RUBBER	2		T3X30X70
	43	RFA25018AN0	COVER	ASSY	1		
	42	RFA25019AN0	COVER	ASSY	1		
C	41	RS60401-005S	NUT, HEX	SUS304	13/4	D	M4
	40	RS60607-098S	SCREW, F.H	SUS304	18		M4X14
	39	RFA25001AN0-039	BRACKET	SS400	2		T2.3
	38	RFA25001AN0-038	BRACKET	SS400	4		T2.3
	37	RFA25001AN0-037	BRACKET	SS400	2		T2.3
	36	RFP57024AN0	BRACKET	ASSY	3		
	35	RS60610-071S	SCREW, R.H	SUS304	4		M4X25
C	34	RFA25001AN0-034	ADHESIVE	ASSY	1		AR
C	33	RFA25001AN0-033	PACKING	NEOPRENE RUBBER	2		T12X25X40
	32	RFA25001AN0-032	BRACKET	SUS304	2		T2.5
C	31						
	30	RS60807-008S	WASHER, PLAIN, ROUND	SUS304	8		M5
	29	RS60606-148S	SCREW, P.H	SUS304	4		M5X16
	28	RFA50004AN0	SUPPORT, WIRE	SUS304	4		
	27	RFA25001AN0-027	BRACKET	SUS304	2		T2.5
	26	RFA25001AN0-026	BRACKET	SUS304	2		T2.5
	25	RFA25006AN0	COVER, DUMMY B	ASSY	1		
	24	RFA25005AN0	COVER, DUMMY A	ASSY	1		
	23	RFA25001AN0-023	PACKING	NEOPRENE RUBBER	4		T5
	22	RFA25001AN0-022	PACKING	NEOPRENE RUBBER	4		T2
	21	RFA25001AN0-021	PACKING	NEOPRENE RUBBER	4		T1
C	20	RFA25001AN0-020	PACKING	NEOPRENE RUBBER	6		T3X30
	19						
	18	RFA25001AN0-018	PACKING	NEOPRENE RUBBER	6		T2X30
	17	RFA25001AN0-017	PACKING	NEOPRENE RUBBER	6		T5X40
	16	RS60918-064A	RIVET, BLIND P.H	A1070BR	16		PI 4X10
	15	RS60810-001S	WASHER, PLAIN, SQUARE	SUS304	12		M6
	14	RS60401-007S	NUT, HEX	SUS304	12		M6
	13	RS60801-006S	WASHER, SPRING	SUS304	12		M6
	12	RS60807-007S	WASHER, PLAIN	SUS304	58		M4
	11	RS60801-004S	WASHER, SPRING	SUS304	58		M4
C	10	RS60610-070S	SCREW, R.H	SUS304	66		M4X20
C	9	RS60610-066S	SCREW, R.H	SUS304	25/16	D	M4X12
	8	RS60610-069S	SCREW, R.H	SUS304	32		M4X16
	7						
	6	RFP57004AN0	BRACKET	ASSY	3		
	5	RFA25003AN0	MOLDING	ASSY	2		
	4	RFP57011AN0	COVER, INSPECTION STABILIZER	ASSY	1		
	3	RFP57003AN0	COVER, INSPECTION STABILIZER	ASSY	1		
	2	RFA25004AN0	COVER, INSPECTION	ASSY	1		
	1	RFA25002AN0	COVER, INSPECTION	ASSY	1		

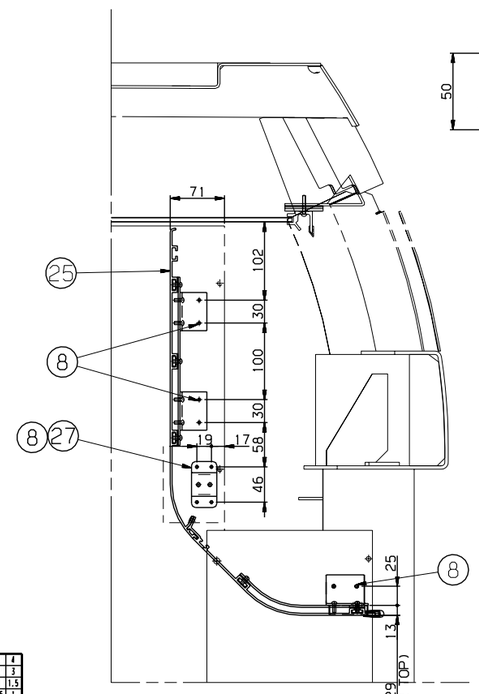

D DETAIL #17
SCALE=1/1

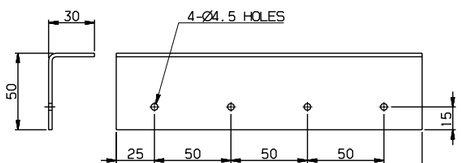

D DETAIL #37
SCALE=1/2

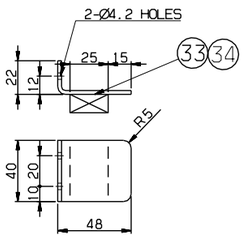

DETAIL #32
SCALE=1/2

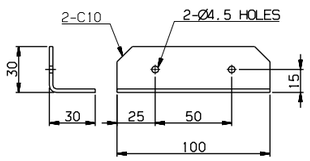

D DETAIL #38
SCALE=1/2

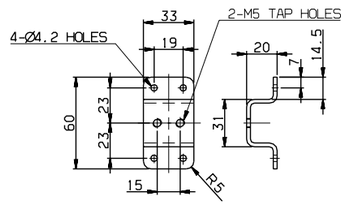

DETAIL #26
SCALE=1/2

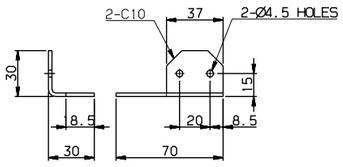

D DETAIL #39
SCALE=1/2

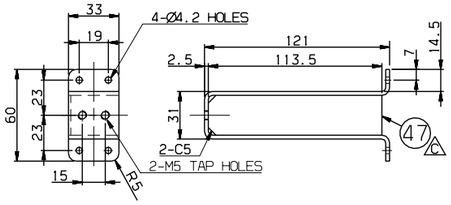

DETAIL #27
SCALE=1/2

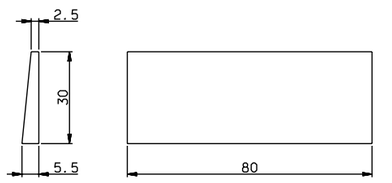

D SECTION D-D
SCALE=1/4

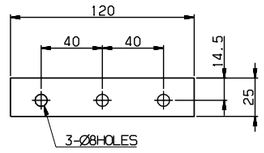

DETAIL #21, #22, #23
SCALE=1/2

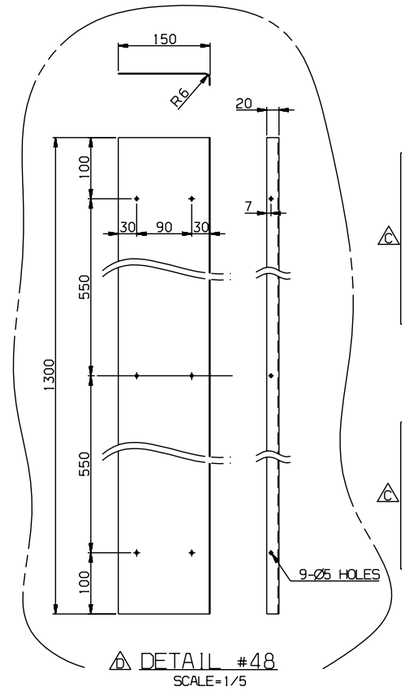

D DETAIL #48
SCALE=1/5

MARK	DATE	DETAIL OF REVISION(E.C ZONE)	E.C NO.	DGN	CHK	APP
Dx7	2011.05.12	ADDED PART NO. #48.	3D5101-U161	Y.T.KIM	K.B.PARK	J.H.PARK
Cx22	2010.02.26	CHANGED DRAWING.	3D5101-U090	B.S.YOO	H.S.KIM	H.G.RYU
Bx3	2009.07.15	CHANGED PART NO. 12, 30.	3D5101-U055	B.S.YOO	H.S.KIM	H.G.RYU
Ax2	2009.01.08	PART NO. 1, 2 MATERIAL. & SHAPE.	3D5101-U038	B.S.YOO	H.S.KIM	H.G.RYU

승인 APP	검도 CHK	설계 DGN
H.G.RYU 2008.10.15	H.S.KIM 2008.10.15	B.S.YOO 2008.10.10

재질 MAT'L ASSY
용접관 G.W

일반공차		
MC	WD	CT
B	B	B

도면 번호 DRG. NO 3D5101
SCALE 1/10
SIZE A1
SHEET 2 of 2
REF. NO. FAP00900

TITLE: COVER, INSPECTION FITTING(2/2)
Ver. 00
Rev. -D
RFA25001AN0
RFA-
PRJT

HYUNDAI Rotem 현대로템주식회사

본 도면은 당사 재산권에 해당하며 무단복사/배포 금지됨. PROPERTY OF ISSUING ENTITY, CANNOT BE DISTRIBUTED OR REPRODUCED WITHOUT AUTHORIZATION.

CATIA

일반공차 GENERAL TOLERANCE				
치수 구분 DIM	~ 40	2	4
	~ 30	2	3
	~ 10	1	1.5
	< 3	0.5	1
길이 구분 LENGTH	~ 3150	-	7
	~ 1600	4	5
	~ 800	3	4
	~ 400	2	3
	~ 200	1.5	2
	~ 100	1	1.5
등급 GRADE		A	B
주조 CASTING 일반 구분 GENERAL			
~ 20M		8	14	24
~ 15M		7	12	21
~ 12M		6	10	18
~ 8M		5	8	14
~ 4M		4	6	11
~ 2M		3	4	8
~ 1M		2	3	6
~ 315		1	2	4
~ 120		1	2	3
~ 30		1	1	1
등급 GRADE		A	B	C
절삭 구분 MACHINING	(±)			
~ 20M	-	16.0	8.0
~ 15M	-	5.0	7.0
~ 12M	-	4.0	6.0
~ 8M	-	3.0	5.0
~ 4M	0.8	2.0	4.0
~ 2M	0.5	1.2	3.0
~ 1M	0.3	0.8	2.0
~ 315	0.2	0.5	1.2
~ 120	0.15	0.3	0.8
~ 30	0.1	0.2	0.5
3 ~ 6	0.05	0.1	0.2
등급 GRADE		A	B	C
가공 구분 MACHINING	(±)			